tyco
Flow Control

raimondi

Forged Steel Pressure Seal Swing and Tilting Disc Check Valves - Buttwelded or Flanged Ends.

Contents

1	**Valve Storage**	**1**
1.1	Preparation and Preservation for Shipment	1
1.2	Handling Requirements	1
1.3	Storage and Preservation before Installation	2
2	**Installation**	**2**
2.1	Preparation before Installation	2
2.2	Installation Instructions	2
2.3	Periodic Valve Verification during Service	3
	Troubleshooting Guide	3
	Table I: Bolt Torque for Bonnet Bolts	4
3	**Operation and maintenance instructions**	**4**
3.1	Check Valves	4
Material Specifications Swing Check Valves		**5**
Material Specifications Tilting Disc Check Valves		6
4	**Valve Removal**	**7**
5	**Lubricants and Special Tools**	**7**
5.1	Lubricants	7
5.2	Special Tools	7
	Table II: Grease and Lubricant List	7
6	**Operational Safety Instructions (O.S.I.) in accordance with PED requirements**	**7**

Section 1 - Valve Storage

1.1 Preparation and Preservation for Shipment

All valves are properly packed in order to protect the parts that are subject to deterioration during transportation and storage on site. In particular, the following precautions should be taken:

1. The valves must be packed with the disc in the closed position.

1a. Buttwelding end valves: weld ends surface shall be protected with suitable protective like Deoxaluminite. The ends shall be closed with plywood or plastic discs fixed at the edge by strips.

1b. Flanged end valves: the flange sealing surfaces (raised faces) of the valves shall be protected with suitable protective grease. The end faces of the valve must be protected with plastic or wooden discs fixed with straps.

2. The type of packing must be defined in the Customer's order and shall be appropriate to ensure safe transportation to final destination and eventual conservation before installation.

1.2 Handling Requirements

A - Packed Valves

Pallets: Lifting and handling of the packed valves in pallets will be carried out by a fork lift truck, by means of the appropriate fork hitches.

Cases: The lifting of packed valves in cases will be carried out in the lifting points and at the center of gravity position which have been marked. The transportation of all packed material must be carried out safely and following the local safety regulations.

B - Unpacked Valves

1. The lifting and the handling of these valves have to be carried out by using appropriate means and by respecting the carrying limits. The handling must be carried out on pallets, protecting the machined surfaces to avoid any damage.
2. With large dimensions valves, the sling and the hooking of the load must be carried out by using the appropriate tools (brackets, hooks, fasteners, ropes) and load balancing tools in order to prevent them from falling or moving during the lifting and the handling.

Valve slinging

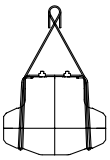

Tilting disc, swing check
and screw down check valve

Figure no. 1

1.3 Storage and Preservation before Installation

In case the valves have to be stored before installation, the storage has to be carried out in a controlled way, and has to be performed in accordance with the following criteria:
1. The valves have to be stocked in a closed, clean and dry storage room.
2. The disc must be in the closed position, and the end faces must be protected with plastic or wooden discs fixed with straps. If possible, keep the original protection.
3. Periodical checks have to be carried out in the storage area to verify that the above mentioned conditions are maintained.

- Do not place consignment packages directly on the ground.
- Do not expose consignment packages to the weather or directly to the sun.
- Check the packaging every two months.

Note

Storage in an open area for a limited period can be considered only in case the valves have appropriate packing (packed in cases lined with tarred paper, and contents well protected with barrier sacks).

Caution
For valve handling and/or lifting, the lifting equipment (fasteners, hooks, etc.) must be sized and selected while taking into account the valve weight indicated in the packing list and/or delivery note. Lifting and handling must be made only by qualified personnel.
Caution must be taken during the handling to avoid that this equipment passes over the workers or over any other place where a possible fall could cause damage. In any case, the local safety regulations must be respected.

Section 2 - Installation

2.1 Preparation before Installation
1. Carefully remove the valve from the shipping package (box or pallet) avoiding any damage to the valve.
2. The valves are shipped with the ends protected with caps and a thin layer of protective grease. Before installing the valve, remove the caps and clean carefully, then de-grease both surfaces with a solvent. Clean the inside of the valve with a clean cloth.
3. Confirm that the materials of construction listed on the valve nameplates (service and temperature) are appropriate for the service intended and are as specified.
4. Define the preferred mounting orientation with respect to the system pressure. If any (see arrow on the body), identify the upstream side and downstream side.

2.2 Installation Instructions
Check valves are usually installed on horizontal pipe with the same flow direction of the arrow stamped on the body.
Check valves can also be installed on vertical pipe.
For operating temperatures above 200°C (392°F) a thermal insulation of the valve body is recommended.

Warning

Before lifting or handling the valve, make sure you have no limitation to do it. Check if there are some safety messages attached to the lifting points of the valve and, if any, find the proper document in the user manual which describes how you can operate under safety conditions.

Handling and lifting of the valves during installation MUST be performed following the same criteria and instruction described in previous points “1.2 Handling Requirements” and “1.3 Storage and Preservation” before installation.

Warning

Verify that the direction of the flow of the line corresponds to the arrow indicated on the valve body.

A - Buttweld Valves

1. Position the valve and check for alignment with the pipe, then proceed with welding, in accordance with the applicable welding procedure.

B - Flanged Valves

1. Position the valve between the two flanges of the pipe and put the seal gasket between valve flange and pipe flange. Ensure that it is correctly positioned.
2. Assemble the valve to the pipe by means of bolts which shall be tightened by using the crossover method.
3. Progressively reach the requested torque.

Important

It is recommended to perform piping flushing before installation of valve.

If piping system is pressurized with water for testing, and in case the piping system has been shut down after testing for a long time, the following recommendations should be adopted.

a. Use corrosion inhibitor with water to pressurize the piping system
b. After testing, the piping system should be depressurized and the test water completely drained.

2.3 Periodic Valve Verification during Service

A - Normal Checks

1. Verify every half month that there is no leakage in the body/bonnet area. If a leakage has been detected from the body/bonnet, tighten the nuts (fig. 3 pos. 9) as indicated in Table I.
   If the leakage does not stop, it is necessary to replace the body/bonnet gasket.

B - Preventive Actions

1. Every 4 years disassemble the critical service valves, verify the seat surfaces and lap them again when necessary. Replace the bonnet gasket, clean the stem.

Troubleshooting Guide

Symptom	Possible Cause	Solution
Body-Bonnet leaking	1. Gasket bolting loose (fig. 3, pos.9) 2. Gasket damage	1. Tighten bolting (fig. 3, pos.9) 2. Replace the gasket
Valve leaking	1. Debris trapped in valve 2. Sealing surface damaged	1. Cycle and flush to remove debris 2. Recondition the seat surface

Section 3 - Operation and maintenance instructions

Raisteam valves do not require special care to work properly. The following instruction will help provide a satisfactory and long life service.

Cautions

- Ensure to perform periodic valve verification as described in paragraph 2.3.

Important

- To ensure tightness of pressure seal gasket, pull up bolts must be tightened when the valve is under fully hydrostatic pressure test or twenty-four hours in operation.
- Yearly checking of bolt torque is recommended.

3.1. Check Valves
Operation and Maintenance Instructions

Please refer to fig. 3 and 4.

Assembly

1. All the parts must be cleaned. It is necessary a visual examination to be sure that there are no foreign parts inside.
2. The internal seat surface must be carefully lapped in order to avoid any defect.
3. The seat of the disc (17.1) must be lapped in order to avoid any defect.
4. The disc (17) must be assembled together with the hinge (16), with the pin (19) and with the ring (18). The ring is welded to the end of the disc. The disc has a little tolerance in the hinge bore in order to ensure a little clearance.
5. Assemble this unit together with the plate (13) and the hinge pin (10) into the body.
6. During this assembly, check for free movement and the correct position of the disc.
7. Assemble the bonnet (2) to the body. The operator MUST wear gloves. Assemble carefully the pure graphite gasket (7) covered with stainless steel inlets.
8. Install the gasket and the four pieces of the segment ring over the gasket. Put the segment ring into the body grove.

Important

The segment ring (5) has to be fixed by the safety ring (4). Ensure that the segment ring is in the correct position.

9. The bonnet must be brought into position with the necessary bolts and nuts.

Disassembly

1. For a correct disassembly it is necessary to follow in reverse the assembly instructions.
2. Follow this special remark to disassemble the segment ring: in the upper part of the body, in the area of the segment ring, there are some holes to drive out two parts of the segment ring by using a pin and a hammer.

Cautions

First, drive out the two parts of the segment ring as indicated in fig. 2, then the remaining two parts.

Recommended Spare Parts

Please refer to figure no. 3 (swing check) and figure no. 4 (tilting disc check)

- Gasket (7)
- Hinge Pin (10)
- Hinge (16)
- Disc (17)
- Ring (18)
- Pin (19)

Table I: Bolt Torque for Bonnet Bolts

Diameter		Torque
in	mm	Nm
3/8	M10	30
1/2	M12	70
5/8	M16	140
3/4	M20	260
1	M24	580
1 1/8	M27	760
1 1/4	M30	1350

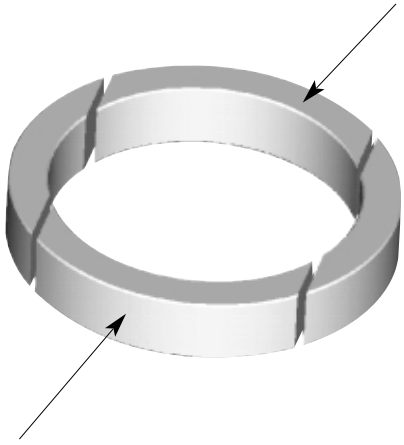

Figure no. 2

Figure 6042 to 6045		
Fig.	**Class**	**PN**
6042	900	09 (160)
6043	1500	15 (250)
6044	2500	25 (500)
6045	4500	45 (720)

Trim Material to API 600			
Item	**Body Seat Surface 1.1**	**Disc Seating Surface 17.1**	**Hinge pin 10**
1	13% Cr	13% Cr	13% Cr
5	Stellite	Stellite	13% Cr
8	Stellite	13% Cr	13% Cr
12	F316/Stellite	F316/Stellite	F316

Swing Check Valves

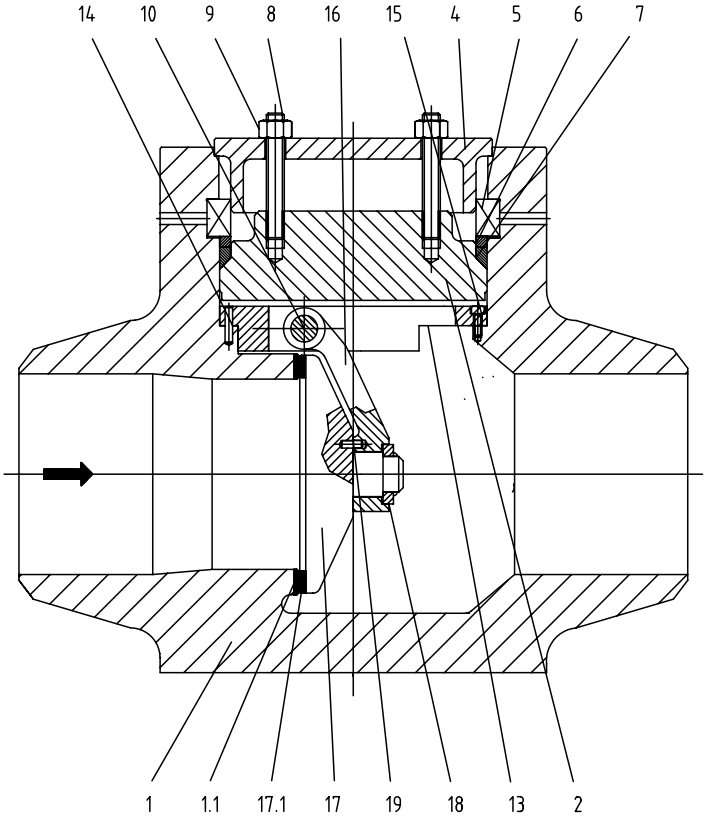

Figure no. 3

Material Specifications									
		41	**42**	**43**	**44**	**45**	**46**	**47**	**48**
Item		**-20°C - 425°C A105 C22.8 1.0460**	**-46°C - 425°C LF2 TT5 1.0411**	**200°C - 540°C F1 15Mo3 1.5415**	**250°C - 550°C F12 13CrMo44 1.7335**	**400°C - 575°C F22 10CrMo910 1.7380**	**500°C - 650°C F91 P91 1.4903**	**38°C - 450°C 15CuNiMoNb5 1.6368**	**130°C - 650°C F316 X6CrNiNb1810 1.4550**
1	Body	A105 C22.8	LF2 TT5	F1 15Mo3	F12 13CrMo44	F22 10CrMo910	F91	15CuNiMoNb5	F316 X6CrNiNb1810
2	Bonnet	A105 C22.8	LF2 TT5	F1 15Mo3	F12 13CrMo44	F22 10CrMo910	F91	15CuNiMoNb5	F316 X6CrNiNb1810
4	Safety Ring	A105	A105	A105	A105	A105	A105	A105	A105
5	Segment Ring	A105 C22.8	LF2 TT5	F1 15Mo3	F12 13CrMo44	F22 10CrMo910	F91	15CuNiMoNb5	F316 X6CrNiNb1810
6	Ring	A105 C22.8	LF2 TT5	F1 15Mo3	F12 13CrMo44	F22 10CrMo910	F91	15CuNiMoNb5	F316 X6CrNiNb1810
7	Gasket	Pure Graphite	Pure Graphite	Pure Graphite	Pure Graphite	Pure Graphite	Pure Graphite	Pure Graphite	Pure Graphite
8	Bolts	A193 B7	A193 B7	A193 B7	A193 B7	A193 B7	A193 B7	A193 B7	A193 B7
9	Nuts	A194 2H	A194 2H	A194 2H	A194 2H	A194 2H	A194 2H	A194 2H	A194 2H
13	Plate	A105 C22.8	LF2 TT5	F12 13CrMo44	F12 13CrMo44	F22 10CrMo910	F22 10CrMo910	A105 C22.8	F316 X6CrNiNb1810
14	Pins	13Cr	13Cr	13Cr	13Cr	13Cr	13Cr	13Cr	F316
15	Socket Screw	F316	F316	F316	F316	F316	F316	F316	F316
16	Hinge	A105 C22.8	LF2 TT5	F1 15Mo3	F12 13CrMo44	F22 10CrMo910	F22 10CrMo910	A105 C22.8	F316 X6CrNiNb1810
17	Disc	A105 C22.8	LF2 TT5	F1 15Mo3	F12 13CrMo44	F22 10CrMo910	F91	15CuNiMoNb5	A105 C22.8
18	Ring	A105 C22.8	LF2 TT5	F1 15Mo3	F12 13CrMo44	F22 10CrMo910	F91	A105 C22.8	A105 C22.8
19	Pin	13Cr	13Cr	13Cr	13Cr	13Cr	13Cr	13Cr	F316

Figure 6042 T.D. to 6045 T.D.

Fig.	Class	PN
6042 TD	900	09 (160)
6043 TD	1500	15 (250)
6044 TD	2500	25 (500)
6045 TD	4500	45 (720)

Trim Material to API 600

Item	Body Seat Surface 1.1	Disc Seating Surface 17.1	Hinge pin 10
1	13% Cr	13% Cr	13% Cr
5	Stellite	Stellite	13% Cr
12	F316/Stellite	F316	F316

Tilting Disc Check Valves

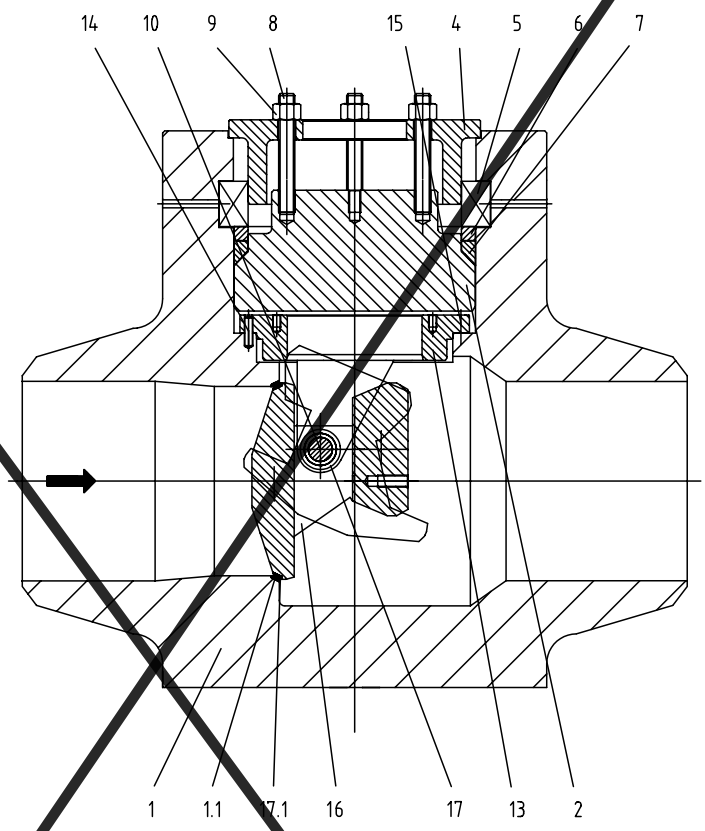

Figure no. 4

Material Specifications

		41	42	43	44	45	46	47	48
Item		**-20°C - 425°C A105 C22.8 1.0460**	**-46°C - 425°C LF2 TT5 1.0411**	**200°C - 540°C F1 15Mo3 1.5415**	**250°C - 550°C F12 13CrMo44 1.7335**	**400°C - 575°C F22 10CrMo910 1.7380**	**500°C - 650°C F91 P91 1.4903**	**38°C - 450°C 15CuNiMoNb5 1.6368**	**130°C - 650°C F316 X6CrNiNb1810 1.4550**
1	Body	A105 C22.8	LF2 TT5	F1 15Mo3	F12 13CrMo44	F22 10CrMo910	F91	15CuNiMoNb5	F316 X6CrNiNb1810
2	Bonnet	A105 C22.8	LF2 TT5	F1 15Mo3	F12 13CrMo44	F22 10CrMo910	F91	15CuNiMoNb5	F316 X6CrNiNb1810
4	Safety Ring	A105	A105	A105	A105	A105	A105	A105	A105
5	Segment Ring	A105 C22.8	LF2 TT5	F1 15Mo3	F12 13CrMo44	F22 10CrMo910	F91	15CuNiMoNb5	F316 X6CrNiNb1810
6	Ring	A105 C22.8	LF2 TT5	F1 15Mo3	F12 13CrMo44	F22 10CrMo910	F91	15CuNiMoNb5	F316 X6CrNiNb1810
7	Gasket	Pure Graphite	Pure Graphite	Pure Graphite	Pure Graphite	Pure Graphite	Pure Graphite	Pure Graphite	Pure Graphite
8	Bolts	A193 B7	A193 B7	A193 B7	A193 B7	A193 B7	A193 B7	A193 B7	A193 B7
9	Nuts	A194 2H	A194 2H	A194 2H	A194 2H	A194 2H	A194 2H	A194 2H	A194 2H
13	Plate	A105 C22.8	LF2 TT5	F12 13CrMo44	F12 13CrMo44	F22 10CrMo910	F22 10CrMo910	A105 C22.8	F316 X6CrNiNb1810
14	Pins	13Cr	13Cr	13Cr	13Cr	13Cr	13Cr	13Cr	F316
15	Socket Screw	F316	F316	F316	F316	F316	F316	F316	F316
16	Disc	A105 C22.8	LF2 TT5	F1 15Mo3	F12 13CrMo44	F22 10CrMo910	F91	15CuNiMoNb5	F316 X6CrNiNb1810
17	Guiding bush	F6A	F6A	F6A	F6A	F6A	F6A	F6A	F316 X6CrNiNb1810

Section 4 - Valve Removal

To remove a valve from the line, it is necessary to operate as follows:
1. Obtain permission to work.

Warning

Depressurize the line before starting any operation with the valve in open position.

2. During the valve cutting operation proceed with care in order to prevent any damage to the seats.
3. After the removal, clean carefully the valve and close the ends with plastic or wooden discs.

Section 5 - Lubricants and Special Tools

5.1 Lubricants

It is recommended to lubricate all bolts and nuts with usual lubricator or Molykote.

5.2 Special Tools

No special tool is required for the maintenance operations described in this manual.

Table II: Grease and Lubricant List

Manufacturer	Grease
AGIP	GRMUEP2
API	PGX2
BP	GREASE LTX2
ESSO	BEACON 2
FINA	FINAGREASE HP FINAGREASE EPL2
MOBIL	MOBILUX EP2
Q8	REMBRANDT EP2
SHELL	ALVANIA R2 SUPERGREASE A
TEXACO	MULTIFAK EP2 GREASE L2
TOTAL	MULTIS EP2 MULTIS 2
VISCOL	SIGNAL ROLSFER 2
STATOIL	UHIWAYLI LI G2

Section 6 - Operational Safety Instructions (O.S.I.) in accordance with PED requirements

According to PED-ESR, par. 3.3 and related, the service pressure and temperature are indicated on the nameplate fixed on the valve (see Fig. 5 and Fig. 6).
The Operation Safety Instructions (internal document TD-PED-0020) are indicated in the attached document (when applicable).

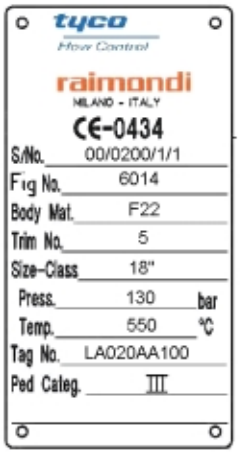

Fig. 5
Example of General Nameplate

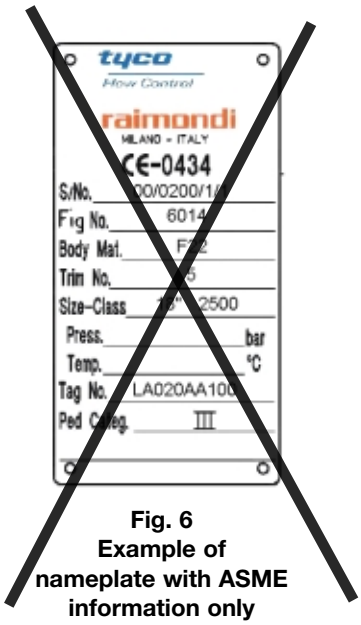

Fig. 6
Example of nameplate with ASME information only